DIVISION 22 AND 26

GENERAL PROVISIONS

1.0 DESCRIPTION:

A. DIVISIONS 22 AND 26 SHALL BE GOVERNED BY ALL APPLICABLE PROVISIONS OF THE CONTRACT DOCUMENT.

B. THE CONTRACTOR SHALL FURNISH, INSTALL AND CONNECT ALL MATERIALS, EQUIPMENT, APPARATUSES, AND INCIDENTALS REQUIRED FOR A COMPLETE AND WORKING INSTALLATION. FOR ALL SYSTEMS SHOWN AND REQUIRED, THE CONTRACTOR SHALL SUPPLY ALL NECESSARY LABOR, EQUIPMENT, TOOLS, INSURANCE, AND TAX SERVICES, AND SHALL ASSUME FULL RESPONSIBILITY FOR ALL OBLIGATIONS ASSOCIATED WITH COMPLETION OF WORK AS PROVIDED BY THE CONTRACT DOCUMENTS.

2.0 STANDARDS, REGULATIONS AND CODES:

A. WORK SHALL COMPLY WITH THE EDITION OF THE APPLICABLE STANDARDS, REGULATIONS AND CODES CURRENTLY IN FORCE OF ALL FEDERAL, STATE AND LOCAL AUTHORITIES HAVING JURISDICTION. WHERE QUANTITIES, SIZES, OR OTHER REQUIREMENTS INDICATED ON THE DRAWINGS OR HEREIN SPECIFIED ARE IN EXCESS OF THE STANDARD OR CODE REQUIREMENTS, THE SPECIFICATIONS AND/OR DRAWINGS SHALL GOVERN. IN THE ABSENCE OF OTHER APPLICABLE LOCAL CODES, ACCEPTABLE TO THE ARCHITECT/ENGINEER, THE 2018 INTERNATIONAL CODES AND 2018 UNIFORM PLUMBING CODE AND THE 2017 NATIONAL ELECTRICAL CODE SHALL APPLY TO THIS WORK.

B. THE CONTRACTOR SHALL COMPLY WITH RULES AND REGULATIONS OF PUBLIC UTILITIES AND MUNICIPAL DEPARTMENTS AFFECTED BY CONNECTIONS OF SERVICES. THE CONTRACTOR SHALL PAY ALL FEES ASSOCIATED THEREWITH.

C. THE CONTRACTOR SHALL BE LICENSED TO PERFORM ASSOCIATED WORK IN THE MUNICIPALITY IN WHICH THE PROJECT IS LOCATED.

D. ALL PRODUCTS AND TYPES OF CONSTRUCTION SHALL MEET OR EXCEED THE LATEST EDITION OF APPLICABLE STANDARDS OF MANUFACTURER, TESTING, PERFORMANCE AND INSTALLATION.

E. WHERE INDICATED OR REQUIRED, COMPLY WITH ALL PROVISIONS OF THE ADA AND/OR THE ABA ACCESSIBILITY GUIDELINES.

F. WHERE INDICATED OR REQUIRED, COMPLY WITH ALL APPLICABLE PROVISIONS OF ENERGY AND VENTILATION CODES IN FORCE AT THE LOCAL JURISDICTION.

3.0 GRAPHIC REPRESENTATION AND JOB CONDITIONS:

A. THE CONTRACT DOCUMENTS SHALL SERVE AS WORKING DRAWINGS FOR THE GENERAL LAYOUT OF THE VARIOUS ITEMS OF EQUIPMENT; ARE DIAGRAMMATIC UNLESS SPECIFICALLY DIMENSIONED, AND DO NOT NECESSARILY INDICATE EVERY REQUIRED ITEM. THE CONTRACTOR SHALL INCLUDE ALL NECESSARY COMPONENTS AND ACCESSORIES AS REQUIRED FOR A COMPLETE WORKING SYSTEM WHETHER SO SPECIFICALLY INDICATED OR NOT.

B. ARCHITECTURAL AND STRUCTURAL DRAWINGS TAKE PRECEDENCE OVER ALL OTHER DRAWINGS IN THE REPRESENTATION OF THE GENERAL CONSTRUCTION WORK; ANY CONFLICTS SHALL BE RESOLVED PRIOR TO COMMENCING WORK. FAILURE TO DO SO SHALL NOT BE CONSIDERED A BASIS FOR THE GRANTING OF ADDITIONAL COMPENSATION.

C. ARRANGE WORK IN A NEAT, WELL ORGANIZED MANNER. COORDINATE WORK WITH OTHER TRADES INVOLVED, PRIOR TO COMMENCING WORK. SUB-CONTRACTORS SHALL WORK TOGETHER TO RESOLVE ANY CONFLICTS OF SPACE OR ROUTING.

4.0 GUARANTEES/WARRANTY:

A. THE CONTRACTOR SHALL GUARANTEE/WARRANTY ALL WORK PERFORMED, INCLUDING LABOR, MATERIALS AND EQUIPMENT FURNISHED UNDER THIS CONTRACT, AGAINST DEFECTS IN MATERIALS AND WORKMANSHIP FOR A MINIMUM PERIOD OF ONE YEAR FROM THE DATE OF THE OWNER'S REPRESENTATIVE FINAL ACCEPTANCE OF THE WORK. PROVIDE EXTENDED WARRANTIES AS NOTED IN EACH SECTION OR SPECIFIED FOR SPECIFIC PRODUCTS.

5.0 WORKMANSHIP:

A. ALL WORK PERFORMED UNDER THIS CONTRACT SHALL PROVIDE A NEAT AND “WORKMANLIKE” APPEARANCE WHEN COMPLETED, TO THE SATISFACTION OF THE OWNER'S REPRESENTATIVE. THE COMPLETE INSTALLATION SHALL FUNCTION AS DESIGNED AND INTENDED WITH RESPECT TO EFFICIENCY, CAPACITY, AND NOISE LEVEL, ETC.

6.0 LOCAL CONDITIONS:

A. THE CONTRACTOR SHALL CAREFULLY EXAMINE AND BECOME THOROUGHLY FAMILIAR WITH LOCAL CONDITIONS, EXISTING INSTALLATIONS AND ALL OTHER CONDITIONS WHICH MAY AFFECT ASSOCIATED WORK. THE CONTRACTOR SHALL LOCATE ALL EXISTING UTILITIES AND PROTECT THEM DURING THE EXECUTION OF THE WORK.

B. THE CONTRACTOR SHALL CAREFULLY EXAMINE ALL CONTRACT DOCUMENTS INCLUDING PROJECT DRAWINGS AND SPECIFICATIONS TO BECOME FAMILIAR WITH THE TYPE OF CONSTRUCTION, MATERIALS, AND EQUIPMENT TO BE USED FOR ALL WORK AND HOW IT WILL AFFECT THE INSTALLATION OF THIS CONTRACT.

C. BY THE ACT OF SUBMITTING A BID, THE CONTRACTOR WILL BE DEEMED TO HAVE MADE SUCH EXAMINATION, TO HAVE ACCEPTED SUCH CONDITIONS, TO HAVE MADE ALLOWANCE THEREFORE, AND INCLUDED ALL COSTS IN HIS PROPOSAL. FAILURE TO DETERMINE EXISTING CONDITIONS WILL NOT BE CONSIDERED A BASIS FOR THE GRANTING OF ADDITIONAL COMPENSATION.

7.0 OPERATION DURING CONSTRUCTION:

A. THE CONTRACTOR IS RESPONSIBLE FOR THE INSTALLATION AND OPERATION, SERVICE AND MAINTENANCE OF ALL NEW EQUIPMENT DURING CONSTRUCTION AND PRIOR TO ACCEPTANCE BY THE OWNER OF THE COMPLETED PROJECT. WARRANTY PERIODS SHALL NOT COMMENCE UNTIL FINAL ACCEPTANCE BY THE OWNER OR OWNER REPRESENTATIVE.

B. THE CONTRACTOR SHALL PROVIDE, AT HIS OWN EXPENSE, ALL TEMPORARY UTILITIES REQUIRED TO PROVIDE FOR AND PROTECT THE WORK AND AS NECESSARY TO MAINTAIN AN ADEQUATE WORK FORCE.

C. THE GENERAL CONTRACTOR SHALL ARRANGE FOR AND PROVIDE, AT HIS OWN EXPENSE, TEMPORARY HEATING AND COOLING AS NECESSARY FOR PROSECUTION OF THE WORK. PERMANENT AIR HANDING, HEATING AND COOLING EQUIPMENT SHALL NOT BE USED FOR TEMPORARY HEATING AND COOLING UNLESS PRE-APPROVED BY THE OWNER OR HIS REPRESENTATIVE.

8.0 SAFETY REGULATIONS:

A. ALL WORK SHALL BE PERFORMED IN COMPLIANCE WITH ALL APPLICABLE GOVERNING SAFETY REGULATIONS, INCLUDING OSHA REGULATIONS. PROVIDE SAFETY LIGHTS, GUARDS AND SIGNS REQUIRED.

9.0 HOUSEKEEPING:

A. THE CONTRACTOR SHALL BE RESPONSIBLE FOR KEEPING STOCKS OF MATERIAL AND EQUIPMENT STORED ON THE PREMISES IN A NEAT AND ORDERLY MANNER.

B. THE CONTACTOR SHALL CLEAN AND MAINTAIN THEIR SPECIFIC PORTIONS OF THE WORK ON A DAILY BASIS OR AS SPECIFIED IN THE GENERAL CONDITIONS.

C. THE CONTRACTOR SHALL REMOVE FROM THE PREMISES ALL WASTE MATERIAL PRESENT AS A RESULT OF HIS WORK.

10.0 CONNECTION AND ALTERATION TO EXISTING SYSTEMS:

A. CONNECTION TO THE EXISTING CAMPUS ELECTRICAL LOOP MUST BE ACCOMPLISHED UNDER THIS CONTRACT. SYSTEM “DOWNTIME” DUE TO CONNECTION SHALL BE KEPT TO AN ABSOLUTE MINIMUM. THE OWNER'S REPRESENTATIVE SHALL JUDGE IF AT WHAT TIME, AND FOR WHAT LENGTH OF TIME A SHUT-DOWN CAN BE TOLERATED.

11.0 SUBSTITUTIONS:

A. MATERIALS, PRODUCTS AND EQUIPMENT DESCRIBED IN THE BIDDING DOCUMENTS ESTABLISHED A STANDARD OF QUALITY TO BE MET BY ANY PROPOSED SUBSTITUTION.

B. CONTRACTOR'S BIDS SHALL BE BASED ON THE MATERIAL IDENTIFIED OR SPECIFIED IN THE CONTRACT DOCUMENTS. ANY PROPOSALS FOR SUBSTITUTION SHALL BE MADE IN WRITING TO THE ARCHITECT/ENGINEER WITH ALL SUPPORTING DOCUMENTATION, ALLOWING ADEQUATE TIME FOR APPROPRIATE ACTION. THE PRODUCTS OF OTHER MANUFACTURERS MAY BE ACCEPTED, IF IN THE OPINION OF THE ARCHITECT/ENGINEER, THE SUBSTITUTE MATERIAL IS OF QUALITY AS GOOD OR BETTER THAN THE MATERIAL SPECIFIED, AND WILL SERVE WITH EQUAL EFFICIENCY AND DEPENDABILITY THE PURPOSE FOR WHICH THE ITEMS SPECIFIED WERE INTENDED. THE BURDEN OF PROOF OF EQUALITY IS ENTIRELY UPON THE PROPOSER.

C. REFER TO DIVISION 1 REQUIREMENTS FOR ADDITIONAL SUBSTITUTION PROCEDURES.

D. WHEREVER SUBSTITUTIONS ALTER THE DESIGN OR SPACE REQUIREMENTS, THE CONTRACTOR SHALL BE RESPONSIBLE FOR CONFIRMING ALL SUBSTITUTED EQUIPMENT AND MATERIALS FIT WITHIN THE ALLOCATED SPACE WHILE MAINTAINING CODE REQUIRED ACCESS AND CLEARANCE. HE SHALL INCLUDE ALL ASSOCIATED COST ITEMS OF THE REVISED DESIGN AND OF CONSTRUCTION WORK REQUIRED BY HIS OR OTHER TRADES AFFECTED BY THE PROPOSED SUBSTITUTION.

12.0 SHOP DRAWINGS AND PRODUCT DATA:

A. THE CHECKING OF SHOP DRAWINGS IS A GRATUITOUS ASSISTANCE AND IN NO WAY RELIEVES THE CONTRACTOR OF RESPONSIBILITY FOR DEVIATIONS FROM THE CONTRACT DOCUMENTS. THE CONTRACTOR SHALL SUBMIT PROJECT SHOP DRAWINGS ELECTRONICALLY IN PDF FORMAT, UNLESS INDICATED OTHERWISE.

B. SHOP DRAWINGS AND CATALOG DATA ON ALL MAJOR ITEMS OF EQUIPMENT AND APPARATUS, AND SUCH OTHER ILLUSTRATIVE MATERIALS AS MAY BE CONSIDERED NECESSARY BY THE OWNER'S REPRESENTATIVE SHALL BE SUBMITTED BY THE CONTRACTOR IN ADEQUATE TIME TO PREVENT DELAY AND CHANGES DURING CONSTRUCTION.

C. REFER TO ARCHITECTURAL DOCUMENTS FOR ADDITIONAL SHOP DRAWING SUBMISSION PROCEDURES.

A. OPERATING AND MAINTENANCE BROCHURE:

1. ON COMPLETION OF THE PROJECT, THE CONTRACTOR SHALL PROVIDE PROJECT MANUALS ELECTRONICALLY (PDF FORMAT UNLESS OTHERWISE INSTRUCTED) CONTAINING COMPLETE PRODUCT INFORMATION FOR ALL INSTALLED OR PROVIDED EQUIPMENT AND COMPONENTS INCLUDING CUT SHEETS, PARTS LISTS, WIRING AND INSTALLATION DIAGRAMS, OPERATING, SERVICE AND LUBRICATION INSTRUCTIONS. PROVIDE MANUFACTURER GUARANTEE AND WARRANTY CERTIFICATES.

B. RECORD DRAWINGS:

1. ON COMPLETION OF THE PROJECT, THE CONTRACTOR SHALL PROVIDE RECORD DRAWINGS WITH ALL FIELD CHANGES CLEARLY AND NEATLY NOTED. THE ORIGINAL ROUTING AND LAYOUT SHALL BE CLEARLY MARKED OUT. REFERENCES TO OTHER DOCUMENTS, DRAWINGS, ADDENDA, RFI'S OR OTHERWISE FOR ADDITIONAL INFORMATION SHALL NOT BE ACCEPTED.

2. THE CONTRACTOR SHALL SUBMIT RECORD DRAWINGS ELECTRONICALLY IN PDF FORMAT (UNLESS OTHERWISE INSTRUCTED).

16.0 SITE WORK AND CONDITIONS:

A. THE CONTRACTOR SHALL DO ALL NECESSARY EXCAVATING AND BACKFILLING FOR THE INSTALLATION OF ASSOCIATED WORK. AFTER THE PIPING OR CONDUIT HAS BEEN INSTALLED, TESTED AND APPROVED, THE TRENCHES SHALL BE BACKFILLED TO GRADE WITH COMPACTED SAND, GRAVEL OR AB-3 MATERIAL OR OTHER MATERIAL AS REQUIRED BY LOCAL AUTHORITIES. COMPACT TO 85% DENSITY FOR UNPAVED AREAS, 95% DENSITY FOR PAVED AREA OR UNDER SLABS.

B. ALL WATER BEARING PIPING SHALL BE 48” MINIMUM BELOW GRADE, ALL GAS PIPING SHALL BE 24” MINIMUM BELOW GRADE, UNLESS INSTRUCTED OTHERWISE.

C. ROADS, ALLEYS, STREET, SIDEWALKS AND UTILITIES DAMAGED DURING THIS WORK SHALL BE RESTORED TO THE SATISFACTION OF OWNER'S REPRESENTATIVE AND AUTHORITIES HAVING JURISDICTION.

D. WHERE SUBSIDENCE IS MEASURABLE OR OBSERVABLE AT EXCAVATION DURING GENERAL PROJECT WARRANTY PERIOD, REMOVE SURFACE, ADD BACKFILL MATERIAL, COMPACT, AND REPLACE SURFACE TREATMENT. RESTORE APPEARANCE OF SURFACE TO MATCH ADJACENT WORK.

17.0 FOUNDATIONS AND SUPPORTS:

A. THE CONTRACTOR SHALL PROVIDE CONCRETE BASES, HANGERS AND FOUNDATIONS FOR ALL MACHINERY AND EQUIPMENT SPECIFIED OR SHOWN IN THIS CONTRACT, INCLUDING FANS, AIR CONDITIONING UNITS, WATER HEATERS, PUMPS, MOTORS, ELECTRICAL GEAR, ETC., UNLESS SPECIFICALLY NOTED OTHERWISE.

B. ALL HANGERS, BRACKETS, CLAMPS, ETC., SHALL BE OF STANDARD WEIGHT STEEL. PERFORATED STRAP HANGERS SHALL NOT BE USED IN ANY WORK. WHEN TWO (2) OR MORE PIPES OR CONDUITS ARE RUN PARALLEL, OR WHERE DUCTS INTERFERE WITH THE PROPER LOCATION OF HANGERS, THEY MAY BE SUPPORTED ON TRAPEZE HANGERS. OTHER HANGERS SHALL BE HINGED RING MALLEABLE IRON, BY GRINNELL OR FEE AND MASON OR APPROVED EQUAL WITH RODS AND HANGER ADJUSTERS FOR ADEQUATE SIZE TO CARRY THE LOADS IMPOSED. ALL PIPING, DUCTWORK AND CONDUIT SYSTEMS SHALL EACH BE INDEPENDENTLY SUPPORTED FROM OTHER SYSTEMS AND FROM EQUIPMENT SO THAT NO WEIGHT IS BORN BY EQUIPMENT.

C. THE CONTRACTOR SHALL TAKE ALL PRECAUTIONS AGAINST EXCESSIVE NOISE OR VIBRATION BY ISOLATING THE VARIOUS ITEMS OF EQUIPMENT FROM THE BUILDING STRUCTURE. PROVIDE FLEXIBLE CONNECTORS WHERE INDICATED AND AT ALL ROTATING EQUIPMENT AND FOR EQUIPMENT MOUNTED ON VIBRATION ISOLATORS.

18.0 CUTTING AND PATCHING:

A. ALL NECESSARY CUTTING, DRILLING AND PATCHING SHALL BE PROVIDED BY THIS CONTRACTOR. STRUCTURAL MEMBERS SHALL NOT BE DISTURBED WITHOUT PRIOR APPROVAL OF THE STRUCTURAL ENGINEER AND/OR THE OWNER'S REPRESENTATIVE. ALL AREAS AND SURFACES DISTURBED BY WORK PERFORMED UNDER THIS CONTRACT SHALL BE NEATLY REPAIRED AND REFINISHED TO THE CONDITION OF ADJOINING SURFACES IN A MANNER SUITABLE TO THE OWNER'S REPRESENTATIVE.

19.0 SLEEVES AND ESCUTCHEONS:

A. PENETRATIONS THRU WALLS AND FLOORS SHALL BE AS DETAILED.

B. WHERE NOT OTHERWISE SHOWN, PENETRATIONS SHALL CONFORM TO THE FOLLOWING:

1. WHERE PIPES OR CONDUITS PASS THROUGH INTERIOR PARTITIONS, GALVANIZED STEEL PIPE SLEEVES OR GALVANIZED STEEL SHEET SLEEVES SHALL BE USED.

2. WHERE PIPES OR CONDUITS PASS THRU CONCRETE FLOORS AND WALLS, WALLS BELOW GRADE OR EXTERIOR WALLS AND SLABS ON GRADE, CAST IRON OR STEEL PIPE SLEEVES SHALL BE USED.

C. SLEEVES THROUGH INTERIOR NON-RATED WALLS, INCLUDING WALLS INDICATED AS SOUND PARTITIONS, SHALL BE PACKED WITH FIBERGLASS OR MINERAL WOOL AND CAULKED.

D. SLEEVES BELOW GRADE, IN EXTERIOR WALLS OR THRU SLABS ON GRADE SHALL HAVE LEAD AND OAKUM OR MECHANICAL LINK SEALS, THUNDER LINE OR ACCEPTABLE EQUIVALENT.

E. PENETRATIONS OF FIRE RATED CONSTRUCTION SHALL BE MADE WITH A UL LISTED FIRE PENETRATION ASSEMBLY SUITABLE FOR THE RATING AT EACH LOCATION. WHERE REQUIRED, SLEEVES THROUGH FIRE RATED STRUCTURE SHALL BE FIRE BARRIER CAULKED WITH PUTTY STRIP OR SHEET BY 3M, HILTI OR ACCEPTABLE EQUAL.

F. PROVIDE STEEL (DRY LOCATIONS) OR BRASS (DAMP LOCATIONS) ESCUTCHEONS TO COMPLETELY COVER PIPE PENETRATION HOLES IN FLOORS, WALLS, OR CEILINGS. PROVIDE PIPE ESCUTCHEONS WITH NICKEL OR CHROME FINISH FOR OCCUPIED AREAS, PRIME PAINT FINISH FOR UNOCCUPIED AREAS, BRASS FOR EXTERIOR.

20.0 MOTORS, CONTROLS AND FIRE ALARM INTERFACE:

A. ALL MOTORS FURNISHED UNDER THIS SPECIFICATION SHALL BE RECOGNIZED MANUFACTURER AND OF ADEQUATE CAPACITY FOR THE LOADS INVOLVED. ALL MOTORS SHALL CONFORM TO THE STANDARDS OF MANUFACTURER AND PERFORMANCE OF THE NATIONAL ELECTRICAL MANUFACTURERS ASSOCIATION AS SHOWN IN THEIR LATEST PUBLICATIONS.

B. ALL MOTORS 3/4 HP AND ABOVE SHALL BE HIGH EFFICIENCY. PROVIDE ECM MOTORS WHERE INDICATED. ANY MOTOR INDICATED FOR USE WITH VARIABLE FREQUENCY DRIVES (VFD) SHALL BE SPECIFICALLY DESIGNED FOR COMPATIBILITY.

C. DISCONNECTS AND MOTOR STARTERS FOR EQUIPMENT SHALL BE BY THE ELECTRICAL CONTRACTOR UNLESS FURNISHED INTEGRAL WITH THE EQUIPMENT OR AS OTHERWISE INDICATED. INSTALLATION SHALL BE BY THE ELECTRICAL CONTRACTOR EXCEPT FOR DEVICES FACTORY INSTALLED AND SHIPPED WITH EQUIPMENT. PROVIDE MANUAL OR MAGNETIC STARTERS WITH NECESSARY AUXILIARY CONTACTS TO ACCOMPLISH THE SPECIFIED OR REQUIRED SEQUENCE OF OPERATION.

D. ALL TEMPERATURE CONTROLS UNLESS NOTED OTHERWISE SHALL BE THE RESPONSIBILITY OF THE MECHANICAL CONTRACTOR.

E. IF NO SEQUENCE OF OPERATION IS INCLUDED, SUBMIT A PROPOSED SEQUENCE TO THE ENGINEER FOR APPROVAL.

F. ALL FIRE ALARM DEVICES INCLUDING DUCT SMOKE DETECTOR AND SHUT DOWN/INTERLOCK WIRING SHALL BE THE RESPONSIBILITY OF THE ELECTRICAL OR FIRE ALARM CONTRACTOR OTHERWISE NOTED.

END OF SECTION

220 100

PLUMBING

1.0 SCOPE:

A. The work included under this contract consists of providing all labor, materials, tools, transportation, services, etc., necessary to complete the installation and to provide complete working systems of the Plumbing Systems, including hot and cold water, waste and vent, storm drainage, fixtures, equipment and other items described in these specifications, as illustrated in the accompanying drawings or as directed by the Architect/Engineer.

B. Extend piping systems as indicated on contract documents or to point of connection as follows:

1. 5'-0” from exterior building wall lines.

2.0 PIPING, FITTINGS AND VALVES:

A. Provide hot and cold water supply to each and every fixture, piece of equipment and to systems where makeup water is required.

B. Provide service valves at each main riser and as required by code.

C. Provide service valves for each item of equipment, at branch piping, fixture groups, individual fixtures and elsewhere as indicated or required. Provide balance valves, strainers, check valves and other valves as indicated or required by the application.

D. Provide a union or flanged connection between each item of equipment and its service valve. Copper to ferrous pipe connections shall have isolation coupling, flange or union.

E. Domestic cold water underground --

1. Pipes, copper -- type "K", soft temper, wrought copper fittings, silver solder joints, 1/2" through 3".

a. Under slab water piping shall be installed in sand fill and shall be jointless where possible or joints minimized. Required joints shall be made with lead free silver solder.

2. Water piping installed exterior to the building shall be a minimum of 48” below grade.

F. Domestic water, interior, above ground -

1. Pipe, copper tube -

a. 2-1/2” and Smaller - Type "L" hard temper copper, wrought or cast copper fittings, Lead free 95/5 or Eagle Hard Silvabrite or “CB” solder joints, or roll grooved mechanical joints or pressure seal joint fittings with EPDM O-ring seals.

2. Provide valves where indicated on the drawings, where required by code, or required for service.

a. 1/4 turn Service -

1) 1/2” thru 2” - Nibco 585-66-LF bronze lead free, 600 PSIG, full port, stainless steel ball and stem.

2) Provide isolation valves where indicated on drawing, including at branches, terminations, each piece of equipment and elsewhere as required by code.

3. Water service back flow preventers shall be reduced pressure type, lead free unless otherwise indicated.

a. Up thru 2” - Watts LF-009, lead free bronze body with ball valves, ASSE 1013/AWWA C511 and USC compliant.

4. Securely anchor and support piping, valves and fittings, with adequate provisions for expansion and contraction. Grade lines, free of traps, to low point at cut-off and drain valve.

5. Hot and cold supply lines to have manufactured pre-charged piston type water hammer arresters sized and installed in accordance with PDI-WH 201. Install at each solenoid actuated quick closing valve location including but not limited to dishwashers, clothes washers, ice makers, electronic faucets and similar items. An arrester shall also be required at each group or battery of fixtures to prevent water hammer. Sioux Chief, JR Smith or equal. Provide access panel where required.

G. Sanitary sewer, vent, interior --

1. Pipe - Standard weight cast iron hubless with no-hub shielded mechanical joints; solid wall schedule 40 PVC, ABS with solvent cement joints; vents may be galvanized malleable iron.

2. Plastic piping shall not be allowed in return air plenums.

3. Floor or equipment drains shall be provided at all locations where equipment is indirect wasted.

4. All gravity drainage shall be graded per code but not less than 1/8” per foot unless noted otherwise, except that piping sizes up thru 2-1/2” shall be sloped at 1/4" per foot. Piping sizes up thru 4” to be sloped at 1/4" per foot where possible and where required by local codes.

5. Vents shall be sloped upward in direction of flow.

6. Indirect waste piping from fixtures or appliances shall be schedule 40 solid wall PVC with solvent cement joints or type 'L' copper hard temper with wrought or cast copper fittings, Lead free 95/5 or Eagle Hard Silvabrite or “CB” solder joints. Support piping from fixture supports and/or floor stanchions. Maintain minimum air gap discharge per code requirements.

H. Sanitary sewer, vent, below grade --

1. Pipe - Standard weight cast iron hubless with no-hub heavy duty mechanical joint fittings; solid wall schedule 40 PVC, ABS with solvent cement joints.

2. All gravity drainage shall be graded per code but not less than 1/8” per foot unless noted otherwise, except that piping sizes up thru 2-1/2” shall be sloped at 1/4" per foot. Piping sizes up thru 4” to be sloped at 1/4" per foot where possible and where required by local codes.

3. Vents below grade shall be 2” minimum size and shall be sloped up in direction of flow.

I. Sanitary sewer, exterior --

1. Pipe -- Cast or ductile iron service weight, with compression gaskets; ABS, PVC with solvent cement joints.

3.0 CLEANOUTS, TEST TEES, TRAPS AND TRAP SEALS:

A. Provide cleanout at the base of each stack or riser, at ends of runs greater than 100', each 135° aggregate change of direction in horizontal piping, where indicated on the drawings or as required by code. Plugs, extra heavy cast brass, screwed. Scoriated tops in unfinished areas, carpet markets in carpet floors, tile top in tile floors, stainless steel cover in finished walls. Cleanouts shall be the same size as pipe up to 4" diameter, 4" cleanouts for larger pipe unless otherwise noted.

B. All traps shall be deep seal type with liquid seal not less than specified by code.

C. Where trap primers are not specified provide all floor and hub drains with trap seal with EPDM or silicone diaphragm, conforming to requirements of ASSE 1072 or 1017.2. Provent Proset Series SG22 or TG22, Sioux Chief series 835, Rectorseal SS series or acceptable equal.

4.0 SLEEVES AND SEALS, FLASHINGS, ROOF PIPE SUPPORTS AND UV PROTECTION:

A. Flash all pipes and vents extending through roof. Flashing details shall be in accordance with roof manufacturer's requirements.

B. Continuous roof piping penetrations shall be made weather tight, conform to roof manufacturer warranty.

C. Provide sleeves where piping penetrations are required thru partitions, concrete floors, concrete slabs on or below grade or foundation walls. Where penetrations are through fire rated assemblies, sleeves shall be fire stopped in accordance with UL listing requirements. Sleeves shall be galvanized steel pipe, sheet steel or cast iron. Penetrations of below grade structures and slabs on grade shall be water proofed with mechanical link seal system, Thunder Line or acceptable equivalent.

D. Plastic piping without UV inhibiters which is exposed to UV radiation from sunlight shall be protected by coating with a UV resistant paint.

5.0 CROSS- CONNECTIONS AND INTERCONNECTIONS:

A. No plumbing device or piping shall be installed which will provide cross-connection or interconnection between a distributing supply or waste so as to make possible the backflow or back-siphonage of polluted water into the potable water supply system. Where the possibility of back-siphonage exists, water supply to the fixture shall be introduced through a suitable backflow preventer device suitable for the hazard protected. Installed backflow preventers must be approved through the University of Southern California Foundation for Cross-Connection Control and Hydraulic Research.

1. They may be an air gap, anti-syphon valve, atmospheric vacuum breaker, pressure vacuum breaker, double check, reduced pressure backflow preventer or as otherwise required by the authority having jurisdiction.

6.0 PLUMBING EQUIPMENT:

A. Water heaters, pumps, expansion tanks and other equipment shall be as scheduled or by acceptable equal by one of the following:

Water Heaters and Accessories:
Water Heaters: A.O. Smith, State, Rheem, Bradford White
Expansion Tanks: Watts, Amtrol, Armstrong, Elbi, Taco, Wessels.

B. Water Heater Installation

1. Pipe water heater drains and/or pan drains to indirect waste per code and as noted or detailed. Water heater P&T relief valves shall be piped independently, indirectly wasted 6” above receptor per code and as noted or detailed.

2. Install vacuum relief valve on each bottom fed storage water heater, installed above the top of the water heater on cold water inlet piping.

3. Mount water heaters on concrete floor pads, suspended from structure on steel rods, on steel floor stands or wall bracket steel frames as indicated on drawings.

4. Suspended heaters up to 50 gallons may be mounted utilizing prefabricated steel support platform, HoldRite SWHP series or acceptable equal.

5. Where water heaters are mounted overhead, mount water heaters in drain pan with 1” minimum drain, HoldRite QP series, acceptable equal or field fabricated equivalent.

6. Water piping connections to water heaters shall be metallic, no plastic piping is permitted within 18” of a water heater connection. Stainless steel flexible connectors with union ends may be used, HoldRite or acceptable equal. Provide 18” minimum flexible corrugated copper or braided stainless steel connector hoses with compression ends for water heaters with 3/4" water connections.

C. Provide equipment accessories including but not limited to operating controls, limit switches, oil sensors, high level controls, timers, aquastats, energy management system interface, etc. as indicated on drawings and as required for a complete operating system.

7.0 INSULATION:

A. Pipe insulation shall conform to the International Energy Conservation Code.

B. Insulate all cold water, hot water piping, Owens Corning or acceptable equal.

1. Cold water piping insulation: 1" fiber glass sectional pipe covering with universal vapor barrier jacket.

2. Hot Water piping insulation: 1" (pipe sizes up thru 1-1/4”) 1-1/2” (pipe sizes 1-1/2” and above) fiber glass sectional pipe covering with universal all service jacket.

C. At Contractor's option, Armacell AP Armaflex unicellular insulation or acceptable equal with 25/50 flame and smoke rating with equal thermal performance may be substituted for fiberglass products.

D. Seal all joints on cold water insulation to maintain vapor barrier.

E. Insulation shall run continuously thru hangers and supports without interruption.

F. Refer to plumbing fixture schedule for protective insulation of fixture drains and water piping for compliance with ADA requirements for People with Disabilities.

1. Provide comparable protection for accessory items such as disposers where items are exposed to contact beneath ADA designated fixtures.

8.0 PIPE SUPPORTS AND ROUTING:

A. Hangers and Supports

1. Piping shall be supported in accordance with industry standards including support methods, sizes and spacing. All supports and installation shall conform to MSS SP58 and 69 and Fed Spec WW-H-171E and A-A-1192A.

2. Pipe Slopes: Install hangers and supports to provide indicated or required pipe slopes to provide for drainage and venting

3. Deflection: Maximum pipe deflections and stresses as allowed by ANSI B31 are not exceeded.

4. Each piping system shall be independently supported with no piping bearing on another and installed such that no weight of piping is borne by the equipment.

5. Provide adjustable hangers, inserts, brackets, rolls, clamps, channels, rods, guides, anchors, flexible connectors, supplementary steel, etc., as required for proper support of all pipe lines. Trapeze may be used for support of multiple pipes. Provide accompanying attachments including bolts and nuts, sheet metal screws or rivets suitable for application.

6. Provide copper plated, plastic coated or felt lined hangers where required to prevent electrolysis or abrasion on copper or plastic piping systems.

7. Upper attachments shall be manufactured items specific to the applicable structure. Include concrete inserts, wedge type drilled in inserts, steel beam and joist clamps, plates, rods, clips, straps and brackets as required by the application.

8. Hangers shall be designed to allow for expansion and contraction of pipe lines and shall be of adequate size to permit covering when required. Provide protective saddles and blocking where supporting insulated piping to prevent crushing insulation.

9. Cable systems may be used at contractor option. They shall be a complete assembly including cables, adjustable locking fasteners or clips and all upper and lower attachments by Gripple or acceptable equal.

B. Routing

1. Piping shall be routed as shown on drawings, parallel to building lines unless otherwise shown, coordinated with building structure and other trades. Adjust pipe routing and drop locations with necessary pipe offsets or changes in elevation to accommodate beams and other obstructions.

9.0 EQUIPMENT AND PIPE LABELS:

A. Equipment labels shall be provided for all plumbing equipment and shall be self-adhesive engraved plastic, blue with white lettering, sized, minimum 1-1/2” high, and located for viewing from ground or floor level. Label shall indicate drawing designation or unique equipment number.

B. Pipe labels for domestic water, waste, vent and gas piping shall be preprinted, color-coded, with 1-1/2” lettering indicating service, and showing flow direction, locate pipe labels where piping is exposed or above accessible ceilings in finished spaces; machine rooms; accessible maintenance spaces such as shafts, tunnels, and plenums; and locations as follows:

1. Near each valve and control device.

2. Near penetrations through walls, floors, ceilings, and inaccessible enclosures.

3. Near major equipment items and other points of origination and termination.

C. Warning labels shall be self-adhesive engraved plastic or preprinted plastic as required by application with white lettering on red background provided at locations as required by code or where hazards to personnel exist.

10.0 MISCELLANEOUS

A. Indirect wastes shall discharge full size thru an air gap to a floor, equipment drain, sanitary floor sink or hub drain. The floor or equipment drain grate shall be fitted with a funnel, the sanitary floor sink shall have a partial grate or the grate shall be omitted. Drains shall be located so they are accessible and not a tripping hazard.

B. Provide escutcheons at all penetrations of exposed walls and ceilings. Escutcheons shall be chrome plated brass in occupied areas, prime paint finish for unoccupied areas unless otherwise noted. Escutcheons for exterior or moist areas shall be brass.

11.0 PROTECTION OF WORK

A. Protection

1. Protect and cover piping and fixture waste and water openings to prevent entry of dirt and debris.

2. Cover and protect fixtures and plumbing equipment to prevent damage.

12.0 TEST, ADJUSTMENTS AND CLEANING:

A. Soil, waste and vent piping testing:

1. Initial Piping Water Test: Fill with water to the top of the highest point of the system extending through roof. Systems may be tested in whole or part. The system shall remain leak free under test for a minimum period of Fifteen (15) minutes.

a. Gravity Drain Test: Either 10' water column or at a pressure not less than 10% above that the piping will be subjected to during nominal operation

2. Final Piping Test: The completed system(s) shall be visually inspected to determine compliance with all codes and standards. Where required by the building official, the completed system shall be smoke tested with all traps water filled and system pressured to 1” WC for a minimum period of fifteen (15) minutes.

B. Water line testing:

1. Water piping shall be purged and tested with compressed air or water at 50 PSIG above the operating pressure but not to exceed the pressure rating of piping system materials for a period of 2 hours with no measurable pressure drop.

C. After successful testing, sterilize water system with an approved solution in accordance with local health officials.

D. Contractor to submit all test data and other documentation for record.

13.0 FIXTURE BRANCH PIPING:

A. Fixture branch and connection sizes shall be as shown in the plumbing fixture schedule on the drawings and not less than required by code.

B. Minimum waste or vent size below slab on grade shall be 2”.

14.0 PLUMBING FIXTURES:

A. Refer to plumbing fixture schedule for plumbing fixtures and accessories. Include all fittings and accessories as required for a complete working system.

B. Where required for ADA compliance, provide lavatory and sink offset drain and tailpiece assembly.

C. At contractor option, flexible stainless steel braided hose, 125 PSIG rated, with non-toxic liner and compression fittings may be used in lieu of chrome plated brass riser tube. Where ADA complinace is required, provide flexible insulation wrap on braided water supplies in lieu of specified molded vinyl wrap.

15.0 FIXTURE AND ACCESSORY MANUFACTURERS:

A. Fixtures, equipment and accessories are specified by manufacturer's numbers as to the type and quality required.

B. Specified manufacturers and approved equal manufacturers are as follows:

FIXTURE, ITEM OR EQUIPMENT	APPROVED EQUAL MANUFACTURERS
Vitreous China Fixtures	American Standard, Toto, Kohler, Zurn
Service Sinks - Terrazzo	Stern-Williams, Acorn, Fiat, Florestone
Supply Faucets & Trim	Chicago Faucets, Delta, Elkay, Kohler, Sloan, T & S Brass, Toto, Watts, Zurn
Stops & Supplies	BrassCraft, McGuire, ProFlo, Watts, Jones Stephens
Waste Fittings	Dearborn Brass, McGuire, ProFlo, Jones Stephens, Watts
ADA Under Lavatory Pipe Covers	Trubro, ProFlo, Plumberex
Water Closet Seats	Church, Bemis, Beneke, Centoco, Olsonite, Toto
Carriers	J R Smith, Josam, Wade, Watts, Zurn
Drains and Drainage Products	J R Smith, Sioux Chief, Wade, Watts, Zurn, Josam
Water Shock Arrestors	Amtrol, J R Smith, Precision Plumbing Products, Sioux Chief, Watts, Zurn
Mixing Valves, point of use	Leonard, Acorn, Delta, Wilkins, Watts, Zurn

END OF SECTION

ELLISON-AUXIER
ARCHITECTS

924 FRANCIS ST.
ST. JOSEPH, MO 64501
P: 816-233-8003 F: 816-233-7793
www.ellison-auxier.com

CONSULTANTS

Lankford Fendler + associates
1730 Walnut Street Kansas City, Missouri 64108
1915 Frederick Avenue, St. Joseph, Missouri 64501
Phone: 816.221.1411 | Fax: 816.221.1429
LANKFORD | FENDLER + ASSOCIATES, CONSULTING ENGINEERS, INC.

COPYRIGHT © 2024

NO.	ISSUE DESCRIPTION	DATE

NO.	REVISION DESCRIPTION	DATE

PROJECT:
MISSOURI WESTERN STATE UNIVERSITY
MERCHANDISE BUILDING

SPECIFICAITONS

SHEET:
PE100

OF: DATE: 03/01/24

GENERAL NOTES (TYPICAL ALL 'P' SHEETS)

A. PLUMBING CONTRACTOR IS RESPONSIBLE TO SEE THAT WORK MEETS AND IS IN ACCORDANCE WITH ALL REQUIREMENTS OF FEDERAL, STATE, AND LOCAL LAWS AND CODES AND/OR REQUIREMENTS, INCLUDING HEALTH CODES AND BUILDING OWNER.

B. ALL EXISTING PIPING SHOWN ON DRAWINGS IS SCHEMATIC AND IS BASED ON EXISTING RECORD DRAWINGS PROVIDED BY THE OWNER AND DO NOT REFLECT EXACT EXISTING CONDITIONS. CONTRACTOR TO FIELD VERIFY EXACT DEPTH AND/OR LOCATIONS ON JOB SITE. CONTRACTOR SHALL REROUTE NEW WORK TO ACCOMMODATE EXACT LOCATIONS OF EXISTING UTILITIES, STUBOUTS AND/OR CONNECTIONS.

C. CUTTING AND PATCHING OF FLOORS, WALLS, CEILING, ETC., REQUIRED IN STRICT ACCORDANCE WITH THE RULES AND REGULATIONS OF THE ARCHITECT'S AND/OR BUILDING OWNER REQUIREMENTS.

D. COORDINATE ALL WORK WITH OTHER TRADES PRIOR TO INSTALLATION TO AVOID ROUTING CONFLICTS.

E. INSTALL ELASTOMERIC JOINT SEALER AROUND ALL PIPES PASSING THRU INTERIOR NON-RATED CONCRETE AND MASONRY WALLS, GYPSUM-BOARD PARTITIONS, AND CONCRETE FLOOR/ROOF SLABS. FOR FIRE RATED INTERIOR CONCRETE AND MASONRY WALLS, GYPSUM-BOARD PARTITIONS, AND CONCRETE FLOOR/ROOF SLABS SEAL ALL PIPES. INSTALL FIRESTOP MATERIALS IN ALL GAPS PRIOR TO SEALANT APPLICATION. INSTALL SEALER ACCORDING TO MANUFACTURER'S WRITTEN INSTRUCTIONS.

F. PLUMBING CONTRACTOR SHALL MAKE FINAL CONNECTION TO ALL EQUIPMENT BY OTHERS. VERIFY CONNECTIONS SIZES AND REQUIREMENTS.

G. PLUMBING CONTRACTOR SHALL PROVIDE PRO-SET SYSTEMS 'TRAP GUARD' IN ALL FLOOR DRAIN TRAPS WITHIN PROJECT SCOPE OF WORK.

H. UPON REQUEST FOR ELECTRONIC FILES, CONTRACTOR SHALL FILL OUT, SIGN AND RETURN ELECTRONIC MEDIA RELEASE FORM FROM ENGINEER AND PROVIDE PAYMENT FOR FEES STIPULATED ON ELECTRONIC MEDIA RELEASE FORM. UPON RECEIPT OF COMPLETED RELEASE FORM AND PAYMENT, ELECTRONIC FILES WILL BE RELEASED.

I. ALL CABLE TIES FOR LOW VOLTAGE SYSTEMS LOCATED IN PLENUMS UTILIZED FOR AIR MOVEMENT THAT ARE NOT INSTALLED IN CONDUIT SHALL BE 25/50 FLAME AND SMOKE RATED, HELLERMANN TYTON T50 R2C2UL OR EQUIVALENT.

PLUMBING SYMBOLS

	EXISTING TO REMAIN
	NEW PIPING
	FLOW ARROW
CW	COLD WATER
HW	HOT WATER
V	SANITARY VENT ABOVE GROUND/FLOOR
W	SANITARY WASTE BELOW GROUND/FLOOR
	SHUT OFF VALVE
OR	FLOOR DRAIN OR EQMT FLOOR DRAIN
	PIPE DROP/PIPE RISE
	BOTTOM OUTLET TEE
	TOP OUTLET TEE
FFCO	FINISHED FLOOR CLEANOUT
VTR	SANITARY VENT THROUGH ROOF
DWH-1	EQUIPMENT TYPE AND DESIGNATION
	PLUMBING FIXTURE DESIGNATION
	CONNECT TO EXISTING

260 100

ELECTRICAL

1.0 SCOPE:

A. THE WORK INCLUDED UNDER THIS CONTRACT CONSISTS OF THE FURNISHING OF ALL LABOR, MATERIALS, TOOLS, TRANSPORTATION, SERVICES, ETC., NECESSARY TO COMPLETE THE INSTALLATION OF THE ELECTRICAL SYSTEMS AND OTHER ITEMS HEREIN LISTED, ALL AS DIRECTED BY THE ARCHITECT OR ENGINEER, WHICH WORK IS COMPRISED OF, BUT NOT LIMITED TO THE FOLLOWING PRINCIPAL ITEMS:

1. ELECTRICAL SYSTEM FOR LIGHT AND POWER:

   a. ELECTRICAL SERVICE AND DISTRIBUTION SYSTEM REVISIONS.
   b. SWITCHES AND PANEL BOARDS.
   c. SYSTEMS OF CONDUIT, CONDUCTORS, AND BOXES.
   d. RECEPTACLES AND WIRING DEVICES.
   e. LIGHTING FIXTURES AND LAMPS.
   f. POWER SERVICE TO THE VARIOUS MOTORS.
   g. COMPLETE LIGHTING AND POWER SYSTEMS.
   h. ALL SYSTEMS, WIRING AND CONDUIT AS REQUIRED.

2. CONTROL WIRING AND ELECTRICAL INSTALLATION AND CONNECTIONS FOR ITEMS IN OTHER CONTRACTS AS MAY BE LISTED IN THE DRAWINGS.
3. EMPTY CONDUIT AND BOXES FOR FUTURE INSTALLATION OF TELEPHONE WIRING AND MISCELLANEOUS SYSTEMS.
4. ROUGH-IN AND FINAL CONNECTION TO EQUIPMENT FURNISHED BY OTHERS.
5. ALL CABLE TIES FOR LOW VOLTAGE CABLE SYSTEMS LOCATED IN PLENUMS UTILIZED FOR AIR MOVEMENT THAT ARE NOT INSTALLED IN CONDUIT SHALL BE 25/50 FLAME AND SMOKE RATED, HELLERMANN TYTON T50R2C2UL OR EQUIVALENT.

B. RACEWAY WIRING SYSTEMS SHALL BE CONCEALED IN ALL FINISHED PARTS OF THE BUILDING, WHERE POSSIBLE. WHERE THE RACEWAYS ARE EXPOSED, THEY SHALL BE RUN PARALLEL WITH THE BUILDING WALLS IN A NEAT AND WORKMANLIKE MANNER. SHOULD IT APPEAR NECESSARY TO EXPOSE ANY CONDUIT OR WIRING IN FINISHED SPACES, IT SHALL BE BROUGHT TO THE ARCHITECT'S ATTENTION IMMEDIATELY AND THIS CONTRACTOR SHALL REARRANGE ASSOCIATED WORK AS DIRECTED TO FACILITATE AN APPROVED INSTALLATION. CONTRACTOR TO COORDINATE WITH MECHANICAL TRADES TO AVOID DUCTWORK AND PIPING.

C. CONTRACTOR IS RESPONSIBLE TO PROVIDE LIAISON WITH CAMPUS ELECTRICAL AND THEIR COMMUNICATION DIVISION. THE CONTRACTOR SHALL PROVIDE AND INSTALL ALL REQUIRED EQUIPMENT AND CONNECT AS REQUIRED TO COMPLETE AN OPERATING SERVICE TO THE BUILDING.

2.0 RACEWAYS:

A. ALL ELECTRICAL CONDUCTORS ARE TO BE INSTALLED IN METAL RACEWAYS, UNLESS SPECIFICALLY SPECIFIED OR NOTED OTHERWISE. GALVANIZED STEEL OR INTERMEDIATE STEEL CONDUIT AS PERMITTED BY CODE. USE SET SCREW. PROVIDE FLEXIBLE CONDUIT CONNECTION FOR FINAL CONNECTION TO EACH MOTOR NOT TO EXCEED 3' IN LENGTH AND RECESSED LIGHTING FIXTURES NOT TO EXCEED 6' IN LENGTH. PROVIDE PULL WIRES IN ALL EMPTY CONDUIT SYSTEMS. IDENTIFY TERMINUS OF EACH PULL WIRE. ALL EXPOSED RACEWAYS SHALL BE INSTALLED WITH RUNS PARALLEL AND/OR PERPENDICULAR WITH BUILDING WALLS. FASTEN ALL RIGID/NON-FLEXIBLE CONDUIT EVERY 8' AND 2' FROM EACH BOX. CONDUIT SHALL BE EMT WHERE NOT SUBJECT TO MECHANICAL DAMAGE AS PERMITTED BY NATIONAL ELECTRIC CODE (N.E.C.). EMT CONNECTORS AND COUPLINGS 4" AND SMALLER SHALL BE COMPRESSION TYPE. FASTEN ALL MC AND OR FMC EVERY 4.5' FEET AND WITHIN 12" INCHES OF CONDUIT TERMINATION, EXCLUDING FINAL CONNECTIONS TO MOTORS AND LIGHTING FIXTURES.

B. CONDUIT BUSHINGS SHALL BE PROVIDED AND INSTALLED INSIDE ALL DISCONNECTS, PULL BOXES, PANELBOARDS, SWITCHBOARD OR SIMILAR TYPE EQUIPMENT AND WHERE PERMITTED BY NATIONAL ELECTRIC CODE (N.E.C.).

C. SCHEDULE 40 PVC CONDUIT MAY BE USED FOR UNDERGROUND INSTALLATION AND WHERE PERMITTED BY NATIONAL ELECTRIC CODE (N.E.C.). TRANSITION TO RGS FOR SWEEP FROM BELOW GRADE TO ABOVE GRADE.

3.0 WIRES AND CABLES:

A. ELECTRICAL CONDUCTORS, SOFT ANNEALED COPPER WITH CONDUCTIVITY 98% OF THAT OF PURE, STRANDED COPPER, 90 DEGREE - 600V INSULATION AND EQUAL TO GENERAL CABLE COMPANY. WIRE AND CABLE FOR ALL FEEDERS, SUBFEEDERS, MOTOR CIRCUITS AND HIGH AMBIENT LOCATION TYPE SHALL BE THHN. ALL OTHER BRANCH CIRCUIT WIRING SHALL BE TYPE XHHN OR THHN. MINIMUM WIRE SIZE SHALL BE #12 GAUGE AWG. CONTROL WIRING MAY BE #14 GAUGE.

B. FOR CONDUCTORS #4 OR SMALL USE THE FOLLOWING COLOR-CODE:

- 208Y/120V, 1-PHASE: BLACK, RED, WHITE.
- 208Y/120V, 3-PHASE: BLACK, RED, BLUE, WHITE.
- 480Y/277V, 3-PHASE: BROWN, ORANGE, YELLOW, GRAY.
- GREEN SHALL BE USED FOR GROUND WIRE CONDUCTOR.

C. FOR CONDUCTORS LARGER THAN #4, FIELD-APPLIED, COLOR-CODING CONDUCTOR TAPE CAN BE APPLIED IN HALF-LAPPED TURNS FOR A MINIMUM DISTANCE OF 6 INCHES FROM TERMINAL POINTS AND IN BOXES WHERE SPLICES OR TAPS ARE MADE. APPLY LAST TWO TURNS OF TAPE WITH NO TENSION TO PREVENT POSSIBLE UNWINDING. LOCATE BANDS TO AVOID OBSCURING FACTORY CABLE MARKINGS. WHEN USING BLACK INSULATED CONDUCTORS, CONTRACTOR SHALL COLOR-CODE CONDUCTOR INSIDE ALL PULLBOX OR SIMILAR TYPE ENCLOSURES.

D. CONDUCTOR MATERIAL APPLICATIONS:

   a. FEEDERS: COPPER; SOLID FOR NO. 10 AWG AND SMALLER; STRANDED FOR NO. 8 AWG AND LARGER.
   b. FEEDERS: COPPER FOR FEEDERS SMALLER THAN NO. 4 AWG; COPPER OR ALUMINUM FOR FEEDERS NO. 4 AWG AND LARGER. CONDUCTORS SHALL BE SOLID FOR NO. 10 AWG AND SMALLER; STRANDED FOR NO. 8 AWG AND LARGER.
   c. BRANCH CIRCUITS: COPPER. SOLID FOR NO. 12 AWG AND SMALLER; STRANDED FOR NO. 10 AWG AND LARGER.
   d. POWER-LIMITED FIRE ALARM AND CONTROL: SOLID FOR NO. 12 AWG AND SMALLER.

E. CONDUCTOR INSULATION AND MULTI-CONDUCTOR CABLE APPLICATION AND WIRING METHODS:

   a. SERVICE ENTRANCE: TYPE THWN-2, SINGLE CONDUCTORS IN RACEWAY.
   b. EXPOSED FEEDERS: TYPE THHN, SINGLE CONDUCTORS IN RACEWAY.
   c. FEEDERS CONCEALED IN CONCRETE: TYPE THHN, SINGLE CONDUCTORS IN RACEWAY.
   d. EXPOSED BRANCH CIRCUITS, INCLUDING IN CRAWLSPACES: TYPE THHN, SINGLE CONDUCTORS IN RACEWAY.
   e. BRANCH CIRCUITS CONCEALED IN CEILINGS, WALLS, AND PARTITIONS: TYPE THHN, SINGLE CONDUCTORS IN RACEWAY AND OR METAL-CLAD CABLE, TYPE MC.
   f. BRANCH CIRCUITS CONCEALED IN CONCRETE, BELOW SLABS-ON-GRADE, AND UNDERGROUND: TYPE THWN-2, SINGLE CONDUCTORS IN RACEWAY.

4.0 GROUNDING:

A. GROUND ALL ELECTRICAL APPARATUS IN ACCORDANCE WITH N.E.C. AND AS SPECIFIED HEREIN. PROVIDE A SEPARATE GROUNDING CONDUCTOR FOR ALL LIGHTING, RECEPTACLE AND EQUIPMENT CIRCUITS. ALL CABINETS, SWITCHBOARDS, EQUIPMENT CASES, MOTOR FRAMES, INTERIOR METAL COLD WATER PIPING SYSTEMS, AND SYSTEM NEUTRAL CONDUCTORS SHALL BE EFFECTIVELY GROUNDED. USE SOLDERLESS PRESSURE TYPE CONNECTORS, NO PERFORATED STRAP CONNECTORS WILL BE ALLOWED. ENSURE CONTINUOUS BOND WHERE FLEXIBLE CONDUIT IS USED. PROVIDE BONDING JUMPER INSIDE ALL FLEXIBLE CONDUIT. GROUNDING PER N.E.C. 250, AND ANY LOCAL REQUIREMENTS.

5.0 SPLICE AND TAPS:

A. MAKE SPLICES AT JUNCTION BOXES, PULL BOXES, OR OUTLET BOXES ONLY.

6.0 CABINETS, JUNCTION AND PULL BOXES:

A. FLUSH OR SURFACE MOUNTED AS INDICATED ON DRAWINGS. PROVIDE WHERE SHOWN ON DRAWINGS AND WHERE REQUIRED BY CODE. CONSTRUCT OF COLD GAUGE STEEL FOR FLUSH SURFACE MOUNTING.

7.0 OUTLET BOXES:

A. GENERAL ELECTRIC, APPLETON, STEEL CITY OR RACO HOT DIPPED GALVANIZED STEEL BOXES, OR EQUAL. INSTALL AT TERMINAL OF EACH CONDUIT RUN, EACH OUTLET, OR DEVICE. PROVIDE SIZE, TYPE AND DESIGN TO SUIT STRUCTURAL CONDITIONS. ADEQUATE TO ACCOMMODATE SIZE AND NUMBER OF RACEWAYS, CONDUCTORS, DEVICE OR FIXTURE SERVED. PROVIDE PLASTER RINGS OR COVERS ON BOXES WHERE REQUIRED ON EXPOSED WORK, USE APPROVED CAST FERROUS ALLOY OUTLET, JUNCTION BOXES AND FITTINGS. FIXTURE OR DEVICE COVER SHALL COMPLETELY CONCEAL THE SIZE OUTLET BOX USED. INSTALL 3/8" FIXTURE STUD FOR LIGHTING FIXTURES WHERE REQUIRED. LOCATE CEILING OUTLETS TO WORK WITH ARCHITECTURAL FEATURES AS DIRECTED. SWITCHES INSTALLED 48" ABOVE FLOOR ON STRIKE SIDE OF DOOR AS FINALLY HUNG. RECEPTACLES AND TELEPHONE OUTLETS, 18" ABOVE FINISHED FLOOR UNLESS OTHERWISE NOTED. VERIFY ALL OUTLET LOCATIONS ON JOB WITH ARCHITECT.

8.0 PANELBOARDS:

A. PANEL BOARDS ARE AS INDICATED ON THE DRAWINGS. MAIN LUGS ONLY UNLESS NOTED OR SPECIFIED OTHERWISE. PROVIDE TYPEWRITTEN SCHEDULE OF CIRCUITS IN INDEX CARDHOLDER. PROVIDE WITH HINGED DOOR AND HINGED COVER. ALL CIRCUIT BREAKERS SHALL BE BOLT-ON MOLDED CASE AND HAVE POSITIVE "TRIP" INDICATION. BREAKERS USED ON EXISTING PANELS SHALL MATCH EXISTING UNITS AND SHALL BE LABELED TO HAVE POSITIVE "TRIP" INDICATION. BREAKERS SHALL BE LABELED TO INDICATE SUITE NUMBER AND USE. PANELBOARDS SHALL BE ABB(GENERAL ELECTRIC), SQUARE D, SIEMENS OR DISCONNECT SWITCHES:

A. HEAVY DUTY NEMA TYPE 'HD' - SAME MANUFACTURER AS PANELBOARDS. PLASTIC NAMEPLATE PROPERLY ENGRAVED WITH NAME OF EQUIPMENT SERVED, SECURED TO SWITCH COVER. FUSES SHALL BE BUSSMANN OF SIZES AND TYPES SCHEDULED.

9.0 MOTOR AND CONTROL WIRING AND CONNECTIONS:

A. THIS CONTRACTOR TO PROVIDE ALL NECESSARY CONDUIT, BOXES AND SUPPORTS TO EQUIPMENT FURNISHED BY OWNER AND AS INDICATED ON DRAWINGS. PROVIDE A DISCONNECT SWITCH AND STARTER IF REQUIRED.

10.0 LABELING:

A. CONTRACTOR SHALL LABEL EACH AND EVERY J-BOX ABOVE CEILING WITH A PERMANENT MARKER WITH PANEL AND CIRCUIT NUMBER.

B. OUTLETS, ADHESIVE FILM LABEL, MACHINE PRINTED CLEAR BACKGROUND WITH BLACK LETTERS, BY THERMAL TRANSFER OR EQUIVALENT PROCESS. MINIMUM LETTER HEIGHT SHALL BE 1/4 INCH. FACE PLATE SHALL BE LABELED WITH PANEL AND CIRCUIT NUMBER.

C. INTERIOR EQUIPMENT SELF-ADHESIVE, ENGRAVED, LAMINATED ACRYLIC OR MELAMINE LABEL: ADHESIVE BACKED, WITH WHITE LETTERS ON A DARK-GRAY BACKGROUND. MINIMUM LETTER HEIGHT SHALL BE 3/8 INCH (10 MM).

D. EXTERIOR EQUIPMENT: STENCILED OR ENGRAVED, LAMINATED ACRYLIC OR MELAMINE LABEL: PUNCHED OR DRILLED FOR SCREW MOUNTING. WHITE LETTERS ON A BLACK BACKGROUND. MINIMUM LETTER HEIGHT SHALL BE 1 INCH (25 MM).

11.0 WIRING DEVICES:

A. DUPLEX RECEPTACLES SHALL BE HUBBELL #5352-X GROUNDING TYPE, 20A., 125V.; G.F.C.I. SHALL BE HUBBELL GF-5352-X, 20A., 125V.; DUPLEX, G.F.C.I. TYPE. WALL TOGGLE SWITCHES SHALL BE HUBBELL NUMBER 1221-X AND NUMBER 1223-X FOR SINGLE POLE AND THREE WAY TYPES RESPECTIVELY. OTHER SWITCH, RECEPTACLE, AND OUTLET DEVICE VARIATIONS SHALL BE BY HUBBELL OF "SPEC. GRADE" QUALITY. EQUIVALENT DEVICES OF P & S OR LEVITON WILL BE ACCEPTABLE IN LIEU OF THE ABOVE LISTED DEVICES. CONTRACTOR TO VERIFY COLOR OF DEVICES WITH ARCHITECT BEFORE PURCHASE. PROVIDE BRUSHED STAINLESS STEEL COVER PLATES TO MATE AND MATCH DEVICE FOR EACH OUTLET.

B. MOTION SENSOR: CONTACTOR SHALL VERIFY WITH OWNER FOR PROPER TIME DELAY SETTINGS.

12.0 LIGHTING FIXTURES:

A. THIS CONTRACTOR SHALL FURNISH AND INSTALL COMPLETE, UNLESS OTHERWISE SPECIFIED, A LIGHTING FIXTURE ON EACH AND EVERY LIGHTING OUTLET SHOWN ON THE DRAWINGS OF EACH TYPE SCHEDULED BY LETTER AND DESCRIPTION. ALL FIXTURES SHALL BE EQUIPPED WITH LAMPS AS SCHEDULED OR SPECIFIED HEREIN. ALL FIXTURES INSTALLED IN SUSPENDED CEILINGS MUST BE SECURELY FASTENED TO FRAMING MEMBERS PER NEC 410-36B AND LOCAL SEISMIC CODE REQUIREMENTS.

13.0 FIRE ALARM SYSTEM:

A. FIRE ALARM SYSTEM SHALL BE A DELEGATED DESIGN, CONTRACTOR SHALL BE RESPONSIBLE FOR LAYOUT AND DESIGN OF THE FIRE ALARM SYSTEM. SUBMIT ALL NECESSARY DOCUMENTATION INCLUDING STAMPED AND SIGNED DRAWINGS TO THE AUTHORITY HAVING JURISDICTION AND OBTAIN NECESSARY PERMITS FOR APPROVAL AND INSTALLATION OF THE SYSTEM PRIOR TO SUBMITTING SHOP DRAWINGS.

B. ENGINEER'S DRAWINGS SHOWING FIRE ALARM DEVICES ARE SCHEMATIC, AND ONLY PROVIDE CODE INTENT, COORDINATION, AND ALL DEVICES MAY NOT BE INDICATED. FINAL LAYOUT SHALL BE PROVIDED BY THE FIRE ALARM CONTRACTOR. FIRE ALARM CONTRACTOR SHALL BECOME THE DESIGNER OF RECORD AS SUCH, THE CONTRACTOR SHALL BE RESPONSIBLE TO VERIFY DEVICE LAYOUTS COMPLY WITH ALL APPLICABLE CODES AND SHALL INCLUDE IN BID ALL COST ASSOCIATED WITH ADDITIONAL DEVICES SHOULD THEY BE REQUIRED. FINAL LAYOUT SHALL BE COORDINATED WITH THE ARCHITECT AND PLANS.

END OF SECTION

GENERAL NOTES (TYPICAL ALL 'E' SHEETS)

A. REFER TO ARCHITECTS REFLECTED CEILING PLANS FOR EXACT PLACEMENT OF LIGHT FIXTURES, SPEAKER AND F.A. DEVICES IN THE CEILING SYSTEM.

B. REFER TO ARCHITECTURAL DETAILS AND ELEVATIONS FOR COORDINATION OF LOCATION OF ALL WIRING DEVICES BEFORE ROUGH-IN OF J-BOXES.

C. REFER TO ARCHITECTURAL PLANS FOR DETAIL OF ALL CONDUIT THRU ROOF PENETRATIONS.

D. CONNECT EXIT AND EMERGENCY LIGHTS TO HOT LEG, NOT SWITCH LEG.

E. CONTRACTOR SHALL CALCULATE VOLTAGE DROP AND SIZE WIRE ACCORDINGLY. PER N.E.C.

F. PROVIDE 3'-0" CLEARANCE IN FRONT OF DISCONNECTS TO CONDENSING UNITS.

G. INSTALL FIRE ALARM DEVICES THAT COMPLY WITH APPLICABLE CODES. INCLUDING BUT NOT LIMITED TO NFPA, UL, ADA, IBC OR ANY OTHER AUTHORITIES HAVING JURISDICTION.

H. WHERE MORE THAN ONE SWITCH IS INDICATED ON DRAWINGS SIDE BY SIDE, CONTRACTOR SHALL INSTALL SWITCHES UNDER ONE COMMON FACE PLATE.

I. CONTRACTOR MAY WIRE SO FIRST GFI OUTLET PROTECTS ALL DOWN STREAM OUTLETS.

J. FIRE ALARM CONTRACTOR IS RESPONSIBLE OF TESTING AND VERIFYING THAT THE AUDIBILITY OF THE FIRE ALARM SYSTEM MEETS A MINIMUM OF 15 DBA ABOVE AMBIENT NOISE LEVELS. AFTER INSTALLATION AND BEFORE CERTIFICATE OF OCCUPANCY. ADD HORNS WHERE REQUIRED TO MAINTAIN MINIMUM LEVELS.

K. WHERE THE DRAWINGS INDICATE DEDICATED CIRCUITRY WITH NO SHARED NEUTRALS, THE CONTRACTOR SHALL NOT INSTALL MULTI-WIRE BRANCH CIRCUITS WITH A COMMON NEUTRAL.

ELECTRICAL SYMBOLS

	BRANCH CIRCUIT CONCEALED IN CEILING OR WALL. ARROWS INDICATE HOMERUNS TO PANEL. ALL CONDUCTORS ARE MINIMUM NO.12 UNLESS NOTED OTHERWISE.
	PHASE CONDUCTORS
	NEUTRAL CONDUCTOR
	SWITCH-LEG AND OR TRAVELER
	GROUND CONDUCTOR
LP1-10	PANEL - BREAKER NUMBER (IDENTIFICATION)
1/3, 1/3/5	INDICATES X/X= 2-POLE C.B., X/X/X = 3-POLE C.B.
3 5 1	HOMERUN INDICATED LIKE THIS INDICATED THREE SEPARATE CIRCUITS
	CONDUIT CONCEALED IN CEILING OR WALL WITH THREE CONDUCTORS: 1-PHASE; 1-NEUTRAL; 1-GROUND WIRE, MINIMUM NO.12 WIRE UNLESS OTHERWISE SPECIFIED ON DRAWINGS.
	CONDUIT RUN UNDERGROUND OR CONCEALED IN FLOOR SLAB.
	GROUNDING CONDUCTOR NO.12 WIRE EXCEPT AS NOTED
OR	EXIT SIGN - SINGLE FACED - ARROWS AS SHOWN ON DRAWING. SHADED SIDE(S) INDICATES FACE SIDE(S) OF EXIT.
OR	COMBINATION EXIT SIGN/EMERGENCY LIGHTING UNIT - CEILING OR WALL MOUNTED. SHADED SIDE(S) INDICATES FACE SIDE(S) OF EXIT.
	WALL MOUNTED EMERGENCY LIGHTING UNIT WITH INTEGRAL BATTERY AND UNIT MOUNTED HEADS.
*	LED LIGHT FIXTURE, LETTER DENOTES FIXTURE TYPE, REFER TO SCHEDULE
	WALL MOUNTED LIGHT FIXTURE, SIZE AND TYPE AS NOTED
	208Y/120V OR 120/240V PANELBOARD (SURFACE) TOP MOUNTED 6'-0" AFF
	SURFACE MOUNTED EQUIPMENT, TYPE AS INDICATED ON DRAWINGS
	GROUND
	POWER CONNECTION POINT
	DISCONNECT SWITCH, SIZE AND TYPE AS NOTED TOP MOUNTED 5'-0" AFF
S	SINGLE POLE SWITCH. TOP OF DEVICE BOX AT +4'-0" AFF
S D	DIMMER SWITCH. TOP OF DEVICE BOX AT +4'-0" AFF
S MS	WALL MOUNTED MOTION SENSOR, TOP OF DEVICE BOX AT +4'-0" AFF, TYPE AS INDICATED
	PHOTOCELL, SIZE AND TYPE AS NOTED
	DUPLEX RECEPTACLE. +1'-6" AFF OR AS NOTED
	CEILING MOUNTED PHOTO-ELECTRIC SMOKE DETECTOR
	FA VISUAL FIRE ALARM STROBE LIGHT, CEILING MOUNTED
	FA COMBINATION AUDIBLE/VISUAL WALL MOUNTED, +6'-8" AFF.
F	FIRE ALARM MANUAL PULL STATION. +4'-0" AFF
	INDICATES WIRING DEVICE ABOVE RE: DRAWING
WP	WHILE-IN-USE WEATHER PROOF COVER-PLATE
AFF	ABOVE FINISH FLOOR

ELLISON - AUXIER
ARCHITECTS

924 FRANCIS ST.
ST. JOSEPH, MO 64501
P: 816-233-8003 F: 816-233-7793
www.ellison-auxier.com

CONSULTANTS

Lankford Fendler + associates
1730 Walnut Street Kansas City, Missouri 64108
1915 Frederick Avenue, St. Joseph, Missouri 64501
Phone: 816.221.1411 | Fax: 816.221.1429

LANKFORD | FENDLER + ASSOCIATES, CONSULTING ENGINEERS, INC.
COPYRIGHT © 2024

NO. ISSUE DESCRIPTION DATE

NO. REVISION DESCRIPTION DATE

PROJECT:
MISSOURI WESTERN STATE UNIVERSITY
MERCHANDISE BUILDING

SPECIFICAITONS

SHEET:
PE101

OF: DATE: 03/01/24

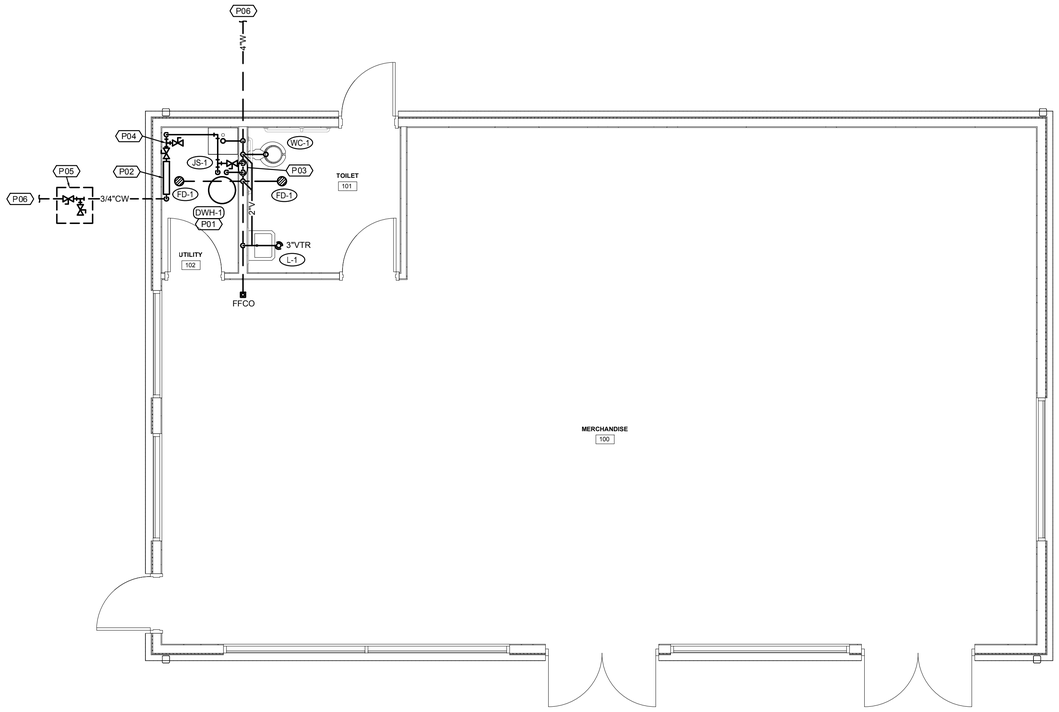

N

BUILDING PLAN-PLUMBING

SCALE: 1/4"=1'-0"

(P##) FLOOR PLAN NOTES

1. NEW ELECTRIC WATER HEATER ON WALL MOUNTED PLATFORM. ROUTE WASTE FROM T&P AND DRAIN VALVE TO MOP SINK OR FLOOR DRAIN AND INDIRECT WASTE.
2. NEW RPZ BACKFLOW PREVENTER, WATTS 009 OR EQUAL. ROUTE WASTE FROM AIR-GAP FITTING OVER TO MOP SINK AND INDIRECT WASTE.
3. 3/4" HOT AND COLD WATER DOWN AND IN WALL, CONNECT 1/2" HOT AND COLD WATER TO LAVATORY AND MOP SINK, AND 1/2" COLD WATER TO WATER CLOSET.
4. PROVIDE SHUTOFF VALVE AND DRAIN DOWN CONNECTION WITH 3/4" HOSE CONNECTION FOR WINTERIZATION. SLOPE ALL PIPING BACK TO DRAIN VALVE LOCATION.
5. PROVIDE KEYED SHUTOFF VALVES AND DRAIN DOWN CONNECTION IN VAULT BELOW FROST LINE FOR WINTERIZATION. PROVIDE BED OF CLEAN GRAVEL AND FILTER FABRIC AS REQUIRED. SLOPE PIPING BACK TO DRAIN VALVE LOCATION.
6. COORDINATE WITH UNIVERSITY AND FACILITY MAINTENANCE FOR UTILITY ROUTING.

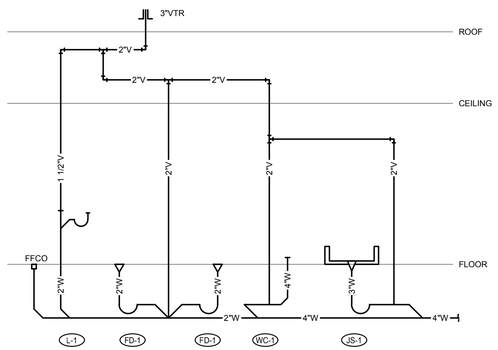

WASTE/VENT RISER DIAGRAM

NO SCALE

PLUMBING FIXTURE SCHEDULE

MARK NO.	FIXTURE TYPE	MANUFACTURER	MODEL NO.	DESCRIPTION	MINIMUM CONNECTION SIZE			
					CW	HW	WASTE	VENT
WC-1	WATER CLOSET (ACCESSIBLE)	AMERICAN-STANDARD	215AA.004 "CADET PRO"	FLOOR MOUNTED FLUSH TANK, WHITE VITREOUS CHINA, HIGH EFFICIENCY (1.6 GPF), ELONGATED POWER WASH BOWL, FULLY GLAZED 2" TRAPWAY, CLOSE-COUPLED TANK, 16-1/2" RIM HEIGHT. ACCESSORIES: CHURCH 9500SSCT WHITE OPEN FRONT SEAT LESS COVER WITH SELF SUSTAINING CHECK HINGES, BOLTS AND CAPS, LOOSE KEY ANGLE STOP AND CHROME-PLATED RISER. NOTE: HANDLE TO BE ON WIDE SIDE OF FIXTURE.	1/2"	-	4"	2"
L-1	LAVATORY (ACCESSIBLE)	AMERICAN-STANDARD	0355.012 "LUCERNE"	WALL HUNG, VITREOUS CHINA, 20" X 18", FRONT OVERFLOW, INTEGRAL BACK. CHICAGO FAUCETS MODEL 802-XKABCP FAUCET WITH CERAMIC OPERATING CARTRIDGE, 4" CENTERS, 4" INTEGRAL SPOUT, LEVER HANDLES. ACCESSORIES: PROVIDE LEONARD 170-LF LEAD FREE BRONZE THERMOSTATIC MIXING VALVE WITH 0.25 GPM MINIMUM FLOW RATE, INTEGRAL CHECK VALVES, DISCHARGE SET AT 105 F, MOUNTED DOWNSTREAM OF FIXTURE STOPS, WITH HOT AND COLD WATER PIPED TO VALVE, TEMPERED AND COLD WATER TO LAVATORY. CHICAGO FAUCETS MODEL 337-XCP OFFSET GRID DRAIN, 1-1/4" X 1-1/2" 17 GA. SEMI-CAST BRASS P-TRAP WITH CLEANOUT AND CHROME PLATED RISERS WITH LOOSE KEY ANGLE STOPS. PROVIDE WITH FULLY MOLDED FLEXIBLE VINYL INSULATION KIT TO COVER TRAP, SUPPLIES AND STOPS, TRUBRO E-Z LAV GUARD. NOTE: MOUNT FIXTURE RIM 34" ABOVE FLOOR.	1/2"	1/2"	1-1/2"	1-1/2"
JS-1	JANITOR SINK	STERN-WILLIAMS	MTB-2424	SIZE 24" X 24" X 10", TERRAZZO SERVICE SINK WITH CAST BRASS DRAIN, STAINLESS STEEL STRAINER, 3" DRAIN CONNECTION CHICAGO FAUCETS MODEL 897-CCP WITH QUATURN OPERATING CARTRIDGE, VACUUM BREAKER SPOUT WITH PAIL HOOK AND WALL BRACE, 3/4" MALE HOSE THREAD OUTLET, 369 LEVER HANDLES, FLANGED ADJUSTABLE SUPPLY ARM AND INTEGRAL SUPPLY STOPS AND CHECK VALVES. ACCESSORIES: V-70 EXTRUDED VINYL BUMPER GUARDS ON EXPOSED SIDES, T-35 36" RUBBER HOSE WITH STAINLESS STEEL WALL BRACKET.	1/2"	1/2"	3"	2"
FD-1	FLOOR DRAIN	SIOUX CHIEF	833-225NR (ROUND) 833-225NQ (SQUARE)	GENERAL PURPOSE, CAST IRON BODY WITH FLASHING COLLAR, ADJUSTABLE STRAINER HEAD, ROUND NICKEL BRONZE STRAINER, AND SEEPAGE OPENINGS. OUTLET SIZE PER PLANS. PROVIDE WITH SQUARE GRATE WHERE DRAIN IS INSTALLED IN TILE FLOORS. NOTE: PROVIDE WITH TRAP PRIMER CONNECTION WHERE REQUIRED BY LOCAL CODE OR AS INDICATED ON DRAWINGS.	-	-	2"	1-1/2"

WATER HEATER SCHEDULE (ELECTRIC)

MARK	MANUFACTURER	MODEL	TANK LINING	TANK CAPACITY (GAL)	RECOVERY	INPUT (KW)	THERMAL EXPANSION TANK MODEL NO.	NOTES	ELECTRICAL						
									VOLT	PHASE	HZ	FLA	MOCP	DISCONNECT	NOTES
DWH-1	A.O SMITH	DEL-20	GLASS	20	10 GPM @ 80°F	2	PLT-5	1,2	208	1	60	9.6	15	NA	A

NOTES: 1. PROVIDE WITH TEMPERATURE AND PRESSURE RELIEF VALVE AND DRAIN.
2. PROVIDE WITH CONTROL THERMAL EXPANSION TANK, WATTS MODEL SCHEDULED WITH WATTS SCV SERVICE CHECK VALVE.

NOTES: A. PANEL IS IN THE SAME ROOM WITH THE WATER HEATER

NOTES:
1. PROVIDE PRESSURE REGULATOR. SET TO 75 PSI WHERE SOURCE PRESSURE EXCEEDS 80 PSI. INSTALL DOWNSTREAM OF BACKFLOW PREVENTER OUTLET.
2. ARRANGEMENT SHOWN IS SCHEMATIC. MODIFY TO SUIT CONDITIONS. INSTALL SO BFP CAN BE SERVICED AND TESTED IN ACCORDANCE W/ ALL RULES & REGULATIONS OF LOCAL AUTHORITIES.
3. ROUTE DRAIN AS INDICATED ON PLANS.
4. SUPPORT AS REQUIRED FROM SLAB.

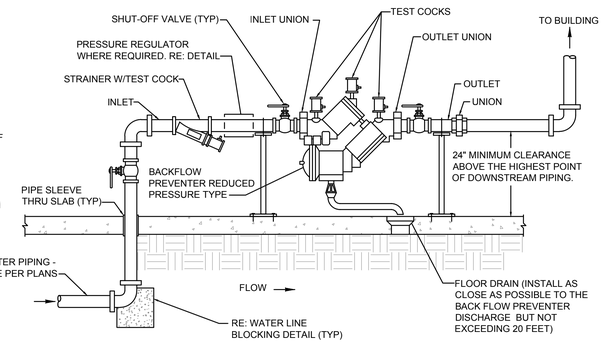

INTERIOR BACKFLOW PREVENTER DETAIL

NO SCALE (FOR PIPE SIZES 2" OR LESS)

NOTES:
1. CONTRACTOR TO INSTALL WHERE INDICATED ON PLANS IN ACCESSIBLE LOCATION.
2. INSTALL PER MANUFACTURERS RECOMMENDATIONS.
3. WATER HEATERS THAT ARE NOT RECIRCULATED SHALL BE EQUIPPED WITH AN INLET AND OUTLET HEAT TRAP, WHETHER INTEGRAL OR EXTERNAL, IN ACCORDANCE WITH THE IECC ENERGY CODE.
4. FOR DOMESTIC WATER SYSTEMS UTILIZING PVC, CPVC OR PEX, PROVIDE 18" MINIMUM COPPER OR BREADED STAINLESS STEEL HOSE CONNECTIONS.

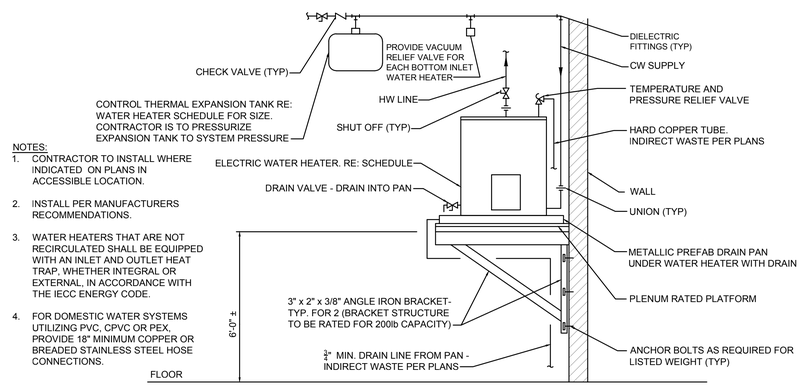

ELECTRIC WATER HEATER DETAIL

NO SCALE

NOT FOR CONSTRUCTION

ELLISON - AUXIER
ARCHITECTS

924 FRANCIS ST.
ST. JOSEPH, MO 64501
P: 816-233-8003 F: 816-233-7793
www.ellison-auxier.com

CONSULTANTS

Lankford Fendler + associates
1730 Walnut Street Kansas City, Missouri 64108
1915 Frederick Avenue, St. Joseph, Missouri 64501
Phone: 816.221.1411 | Fax: 816.221.1429
LANKFORD | FENDLER + ASSOCIATES, CONSULTING ENGINEERS, INC.
COPYRIGHT © 2024

NO.	ISSUE DESCRIPTION	DATE

NO.	REVISION DESCRIPTION	DATE

PROJECT:
MISSOURI WESTERN STATE UNIVERSITY
MERCHANDISE BUILDING
Enter address here

PLUMBING PLAN

SHEET:
P100

OF: DATE: Issue Date

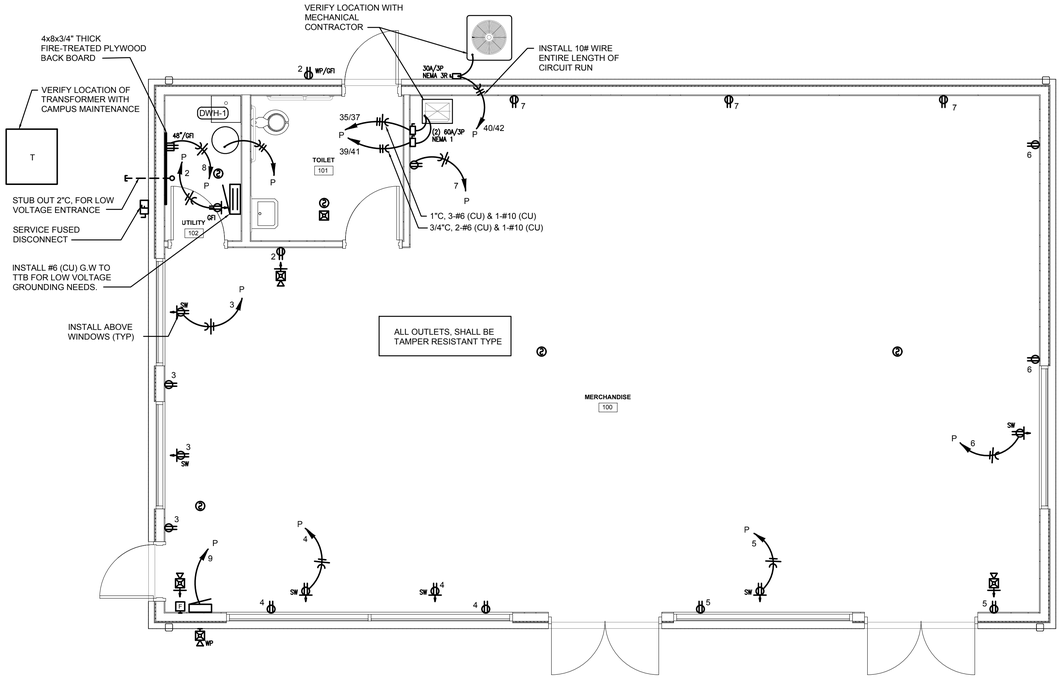

BUILDING PLAN-ELECTRICAL

SCALE: 1/4"=1'-0"

PANELBOARD P

BUS AMPS: 225A — SCCR: PER STUDY — FULLY RATED — TYPE:
MAIN SIZE / TYPE: MLO — NEMA TYPE: 1 — MANUFACTURER:
VOLTS/PHASE: 208Y/120V, 3PH, 4W — MOUNTING: SURFACE — MFG MODEL:
LOCATION: — OPTIONS:

	CKT #	CIRCUIT DECRIPTION	CB AMPS	P	LOAD VA	A VA	B VA	C VA	LOAD VA	P	CB AMPS	CIRCUIT DECRIPTION	CKT #
	1	LTS; BLDG & RR EX. FAN	20	1	742	1,282			540	1	20	REC;	2
	3	REC;	20	1	720		1,440		720	1	20	REC;	4
	5	REC;	20	1	540			1,080	540	1	20	REC;	6
	7	REC;	20	1	720	1,080			360	1	20	REC; TTB BOARD	8
1	9	FIRE ALARM PANEL	20	1	250		250		0	1	20	SPARE	10
	11	SPACE ONLY			0			0	0			SPACE ONLY	12
	13	SPACE ONLY			0	0			0			SPACE ONLY	14
	15	SPACE ONLY			0		0		0			SPACE ONLY	16
	17	SPACE ONLY			0			0	0			SPACE ONLY	18
	19	SPACE ONLY			0	0			0			SPACE ONLY	20
	21	SPACE ONLY			0		0		0			SPACE ONLY	22
	23	SPACE ONLY			0			0	0			SPACE ONLY	24
	25	SPACE ONLY			0	0			0			SPACE ONLY	26
	27	SPACE ONLY			0		0		0			SPACE ONLY	28
	29	SPACE ONLY			0			0	0			SPACE ONLY	30
	31	SPACE ONLY			0	0			0			SPACE ONLY	32
	33	SPACE ONLY			0		0		0			SPACE ONLY	34
ST	35	FURN. & ELEC. HTR 1	60	2	4,670			5,670	1,000	2	15	DWH	36
	37				4,670	5,670			1,000				38
	39	FURN. ELEC. HTR 2	60	2	4,160		6,656		2,496	2	30	CONDENSING UNIT	40
	41				4,160			6,656	2,496				42

	A	B	C
PER PHASE CONNECTED - VA	8,032	8,346	13,406
PER PHASE CONNECTED - AMPS	67	70	112

TOTAL CONNECTED - VA	29,784
TOTAL CONNECTED - AMPS	83
TOTAL DEMAND - VA	34,592
NEC TOTAL DEMAND - AMPS	96

NOTES:
1. PAINT BREAKER HANDLE RED, BREAKER CAPBLE OF BEING LOCKED IN EITHER THE ON OR OFF POSITION.

ST = SHUNT TRIP

*REFER TO THE BRANCH CIRCUIT COPPER CONDUCTOR AND CONDUIT SIZING CHART FOR SIZING BRANCH CIRCUITS OF 100A OR LESS

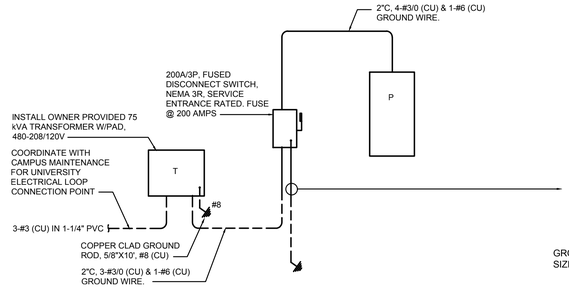

ELECTRICAL RISER DIAGRAM

NO SCALE

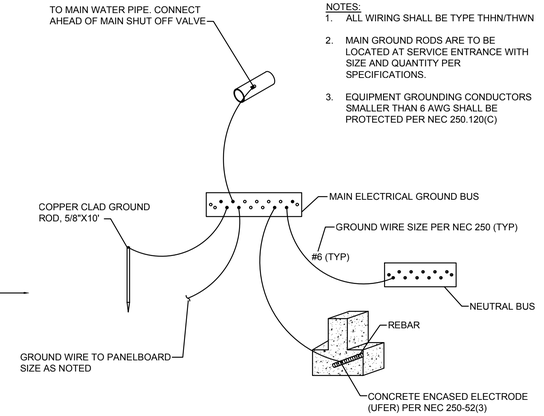

MAIN SERVICE ENTRANCE GROUNDING DETAIL

NO SCALE

NOTES:
1. ALL WIRING SHALL BE TYPE THHN/THWN
2. MAIN GROUND RODS ARE TO BE LOCATED AT SERVICE ENTRANCE WITH SIZE AND QUANTITY PER SPECIFICATIONS.
3. EQUIPMENT GROUNDING CONDUCTORS SMALLER THAN 6 AWG SHALL BE PROTECTED PER NEC 250.120(C)

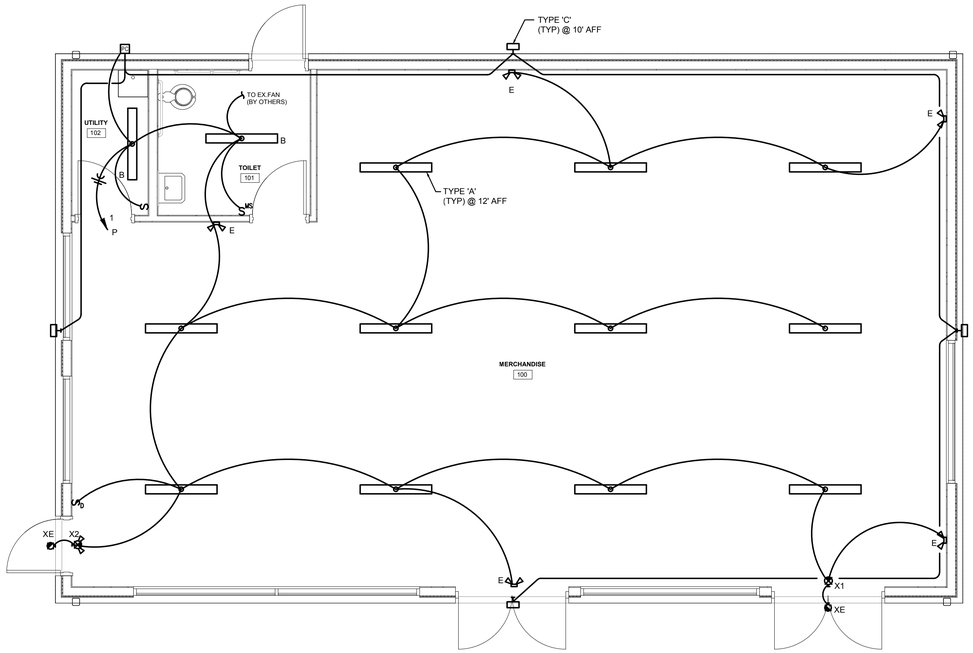

BUILDING PLAN-ELECTRICAL

SCALE: 1/4"=1'-0"

LIGHT FIXTURE SCHEDULE

TYPE	DESCRIPTION	LAMPS	WATTS / VOLTS	NOTES
A	EIKO - LLW4-460-8FCCT LINEAR WRAP AROUND LED LIGHT FIXTURE, WHITE FINISH	LED SELECTABLE 35/40/50K	40 120	
B	SIMILAR TO TYPE "A" EXCEPT PROVIDE "368" LUMEN PACKAGE	LED	32 120	
C	EIKO - WPA1-PS30-FCCT EXTERIOR MOUNTED, LED WALL PACK, BRONZE FINISH	LED SELECTABLE 30/40/50K	12 120	
E	EIKO - EML EMERGENCY LIGHT, WALL MOUNTED, WHITE HOUSING	LED	2 120	
X1	EIKO - EXIT-R EXIT SIGN, WHITE HOUSING RED LETTERS VERIFY WITH FACTORY, PROVIDE REMOTE BATT. TO POWER TYPE XE FIXTURE)	LED	2.5 120	
X2	EIKO - EXIT/EM-R COMBO EXIT/EM. LIGHT, WHITE HOUSING RED LETTERS VERIFY WITH FACTORY, PROVIDE REMOTE BATT. TO POWER TYPE XE FIXTURE)	LED	2.5 120	
XE	EIKO - ES2 SINGLE REMOTE LED EM. HEAD. WHITE HOUSING (7W HEAD)	LED	0 120	

ELLISON - AUXIER
ARCHITECTS

924 FRANCIS ST.
ST. JOSEPH, MO 64501
P: 816-233-8003 F: 816-233-7793
www.ellison-auxier.com

CONSULTANTS

Lankford Fendler + associates
1730 Walnut Street Kansas City, Missouri 64108
1915 Frederick Avenue, St. Joseph, Missouri 64501
Phone: 816.221.1411 | Fax: 816.221.1429

LANKFORD | FENDLER + ASSOCIATES, CONSULTING ENGINEERS, INC.
COPYRIGHT © 2024

NO.	ISSUE DESCRIPTION	DATE

NO.	REVISION DESCRIPTION	DATE

PROJECT:
MISSOURI WESTERN STATE UNIVERSITY
MERCHANDISE BUILDING

ELECTRICAL PLAN

SHEET:
E100

OF: DATE: 03/01/24